16'6" X 35'6" GRECIAN

REVISION HISTORY					
REV.	DESCRIPTION	DATE	STATUS	ECO	BY

DIMENSIONS	SQ FOOT	586	PERIMETER	94'1"	GALLONS	16547

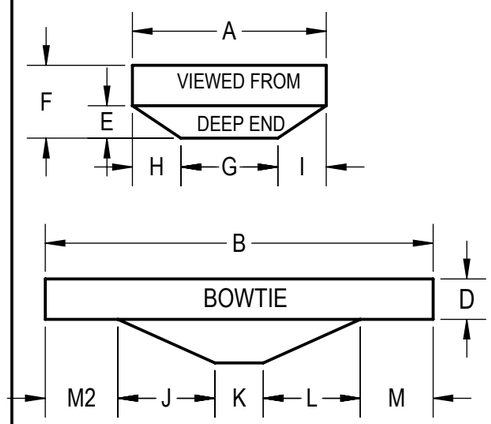

A	16'-6"	K	5'0"
B	35'-6"	L	11'0"
D	3'4"	M	4'3"
E	2'-8"	M2	4'3"
F	6'0"	T	8'
G	12'6"	S	6'
H	2'0"	N	
I	2'0"	P	
J	11'0"	U	27'

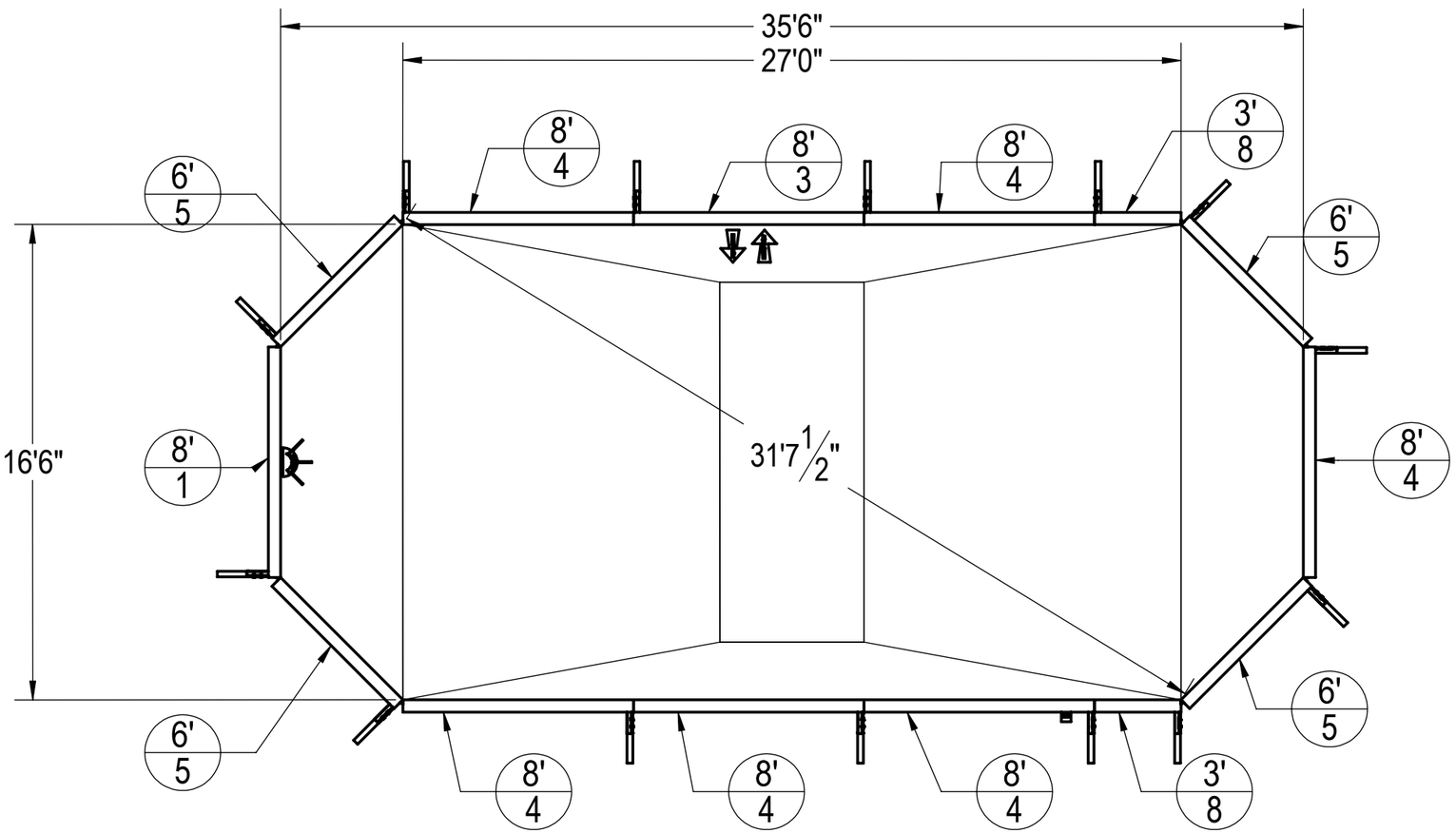

ITEM NO.	PART NUMBER	DESCRIPTION	QTY.
1	HPSD108L	8' LIGHT PANEL	1
2	HPSFOB	STEEL BRACE	14
3	HPSD108AG	8' AG PANEL	1
4	HPSD108P	8' PLAIN PANEL	6
5	HPSD106P	6' PLAIN PANEL	4
6	HPS45I	45° INSERT	8
7	HPS1916	BOLT PACK 50 PCS	5
8	HPSD103P	3' PLAIN PANEL	2

NOTES:
1. THESE ARE FINISHED DIMENSIONS READY FOR THE LINER.
2. DIMENSIONS ARE FROM INSIDE POOL PANELS.
3. THE IDEAL WATER LEVER SHOULD BE TO THE MIDDLE OF THE SKIMMER OPENING(S).

EXCAVATION NOTES:
4. ROUGH EXCAVATION SHOULD BE 2" DEEPER IN EACH INSTANCE.
5. SOIL TO HAVE MINIMUM BEARING CAPACITY OF 2000 PSF.
6. LOCATE TOP OF POOL AT LEAST 6" ABOVE THE SURROUNDING LAND ELEVATION.
7. SEE "OVER DIG DETAIL" FOR EXCAVATION AROUND POOL.
8. FILL VOIDS UNDER BASE OF PANELS AND TAMP WELL.
9. BACK FILL WITH NON-EXPANSIVE MATERIAL.

IMPORTANT NOTES:
THIS DOCUMENT IS FOR ILLUSTRATIVE PURPOSES ONLY. THE DEALER OR CONTRACTOR WHO SELLS OR INSTALLS YOUR POOL IS AN INDEPENDENT CONTRACTOR AND IS NOT AN AGENT OF THE MANUFACTURER. THE CONSTRUCTION METHODS ILLUSTRATED HERE ARE SUGGESTIONS AND APPLY ONLY TO NORMAL GROUND CONDITIONS. THERE MAY BE ADDITIONAL PRECAUTIONS AND/OR METHODS OF CONSTRUCTION. PROPER INSTALLATION IS THE RESPONSIBILITY OF THE DEALER/BUILDER/CONTRACTOR.

PANEL LEGEND

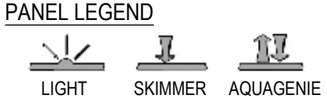

NO DIVING WARNING:
ATTENTION DEALER/BUILDER:
It is your responsibility to ensure the safety package provided
is delivered to the pool owner and that the "NO DIVING" labels
are properly installed.

"NO DIVING" WARNING LABELS MUST BE
INSTALLED IN NO DIVING AREAS
ACCORDING TO ANSI SPECIFICATIONS

OVERDIG DETAIL

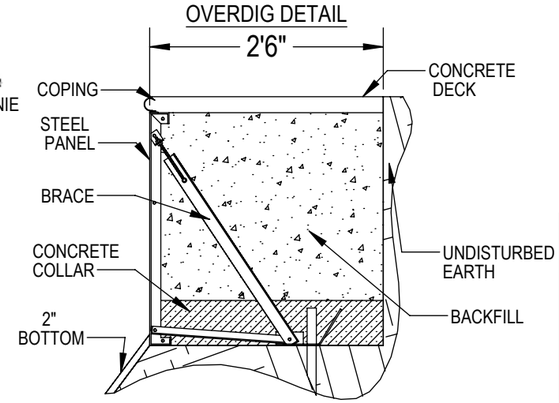

ENGINEERING DRAWING NUMBER: 00000829

WEIGHT: 86.515 lbs
VOLUME: 2394.720 Inch³
COLOR: NA
HEAT TREAT: NA
FINISH: NA
TEXTURE: NA

UNLESS OTHERWISE SPECIFIED
DIMENSIONS ARE IN INCHES
TOLERANCES
DECIMALS: X ± 0.1
XX ± 0.01
XXX ± 0.005
XXXX ± 0.0005
ANGULAR: X ± 0.5
THIRD ANGLE PROJECTION

DESIGNED BY: RCOLBOCH
CREATION DATE: 10/17/2012
DETAILED BY: Rcolboch
DETAILED DATE: 8/30/2012
LAST REVISED BY: rcolboch
LAST REVISED DATE: 11/14/2012
MATERIAL: Material <not specified>

SAMSON STEEL
BY HYDRA POOLS

TITLE: 16'6" X 35'6" GRECIAN SPORT

PART NUMBER: 60223
SCALE: 1:96
SHEET: 1 OF 1
SIZE: B

K:\CAD-PANEL-LAYOUT-SW\layouts\steel layouts\MASTER DIG-DO NOT TOUCH\03-grecian\updated\60223